Camunda Parallel Gateway

In this session we will look at what is Parallel gateway and how it functions ?.

- A Parallel Gateway or AND Gateway is used to synchronize (combine) parallel flows and to create parallel flows
- A Parallel Gateway creates parallel paths without checking any conditions; each outgoing Sequence Flow receives a token upon execution of this Gateway
- For incoming flows, the Parallel Gateway will wait for all incoming flows before triggering the flow through its outgoing Sequence Flows

1. **We will model below process to demonstrate use of parallel gateways.**

   HR Desk, will fill up candidate information from resume and complete the task. As we parallel gateway is used it will create Technical Interview 1 and Technical Interview 2 will be created at the same time. Once these interviews are completed then Manager Desk task is created with all the information of candidate and technical interviews evaluation.

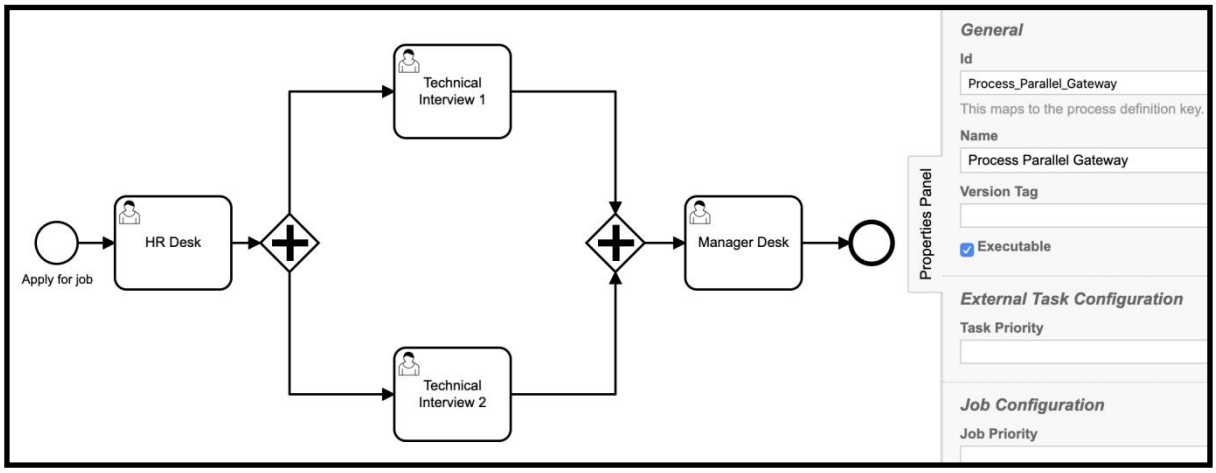

Id: Process_Parallel_Gateway
Name: Process Parallel Gateway

2. Start event: Apply for job

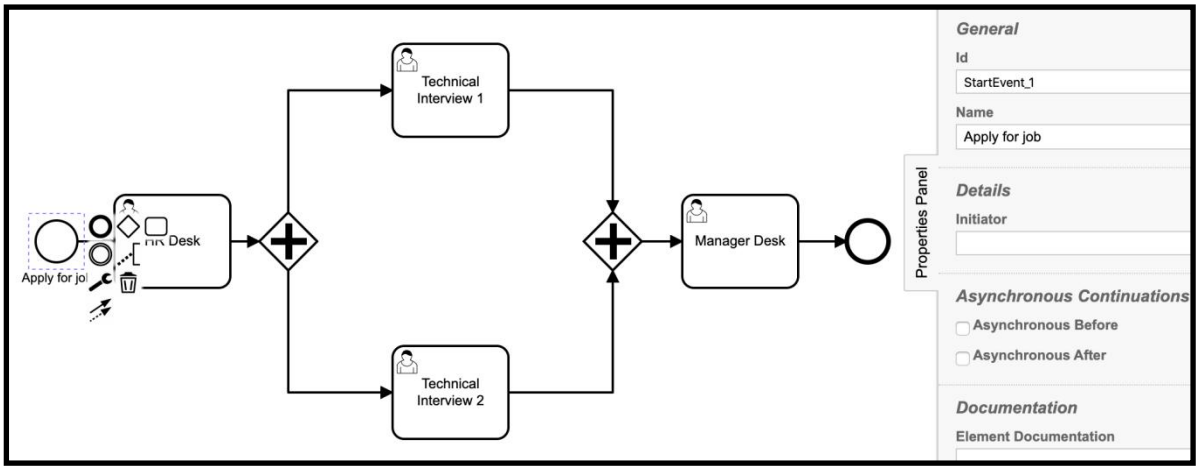

Form fields for start event and user tasks properties are same as

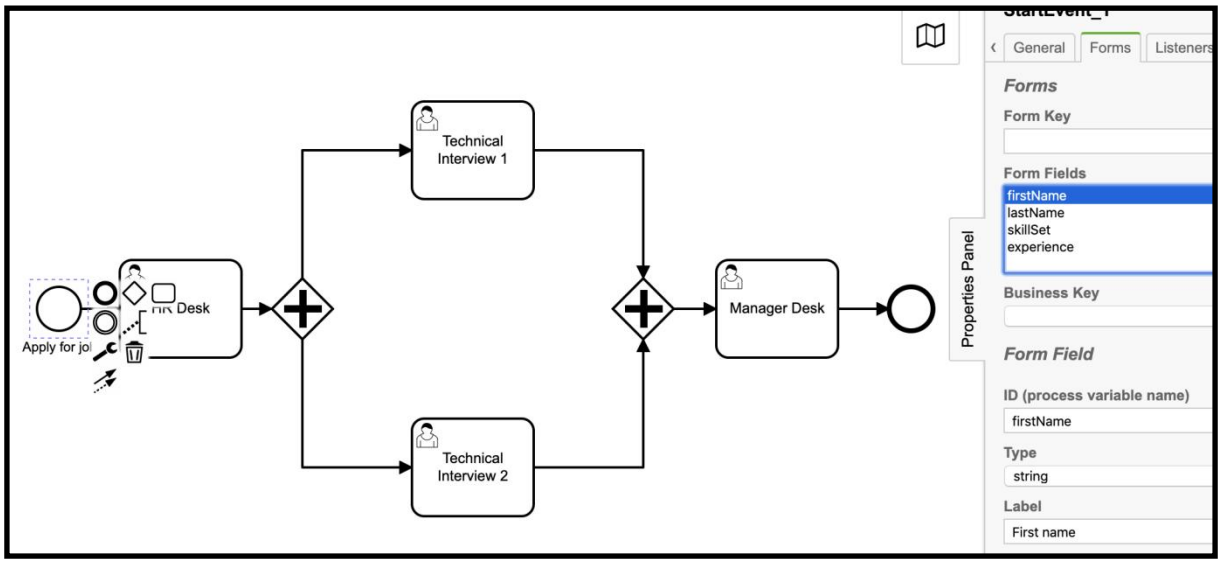
Technical Interview 1
Technical Interview 2
Manager Desk
Apply for jo
Desk
Properties Panel
General
Forms
Listeners
Forms
Form Key
Form Fields
firstName
lastName
skillSet
experience
Business Key
Form Field
ID (process variable name)
firstName
Type
string
Label
First name

Task forms:

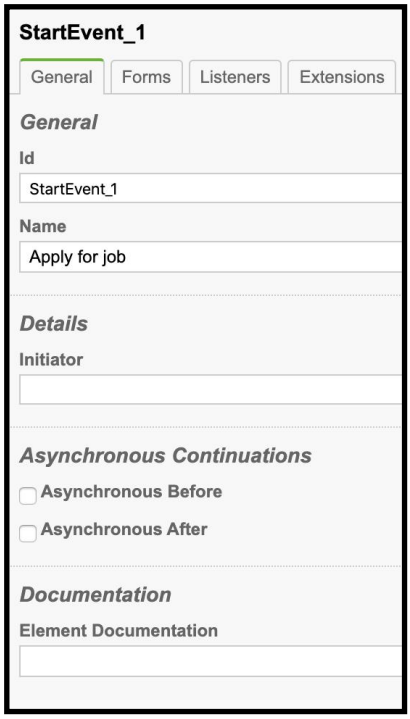
StartEvent_1
General
Forms
Listeners
Extensions
General
Id
StartEvent_1
Name
Apply for job
Details
Initiator
Asynchronous Continuations
Asynchronous Before
Asynchronous After
Documentation
Element Documentation

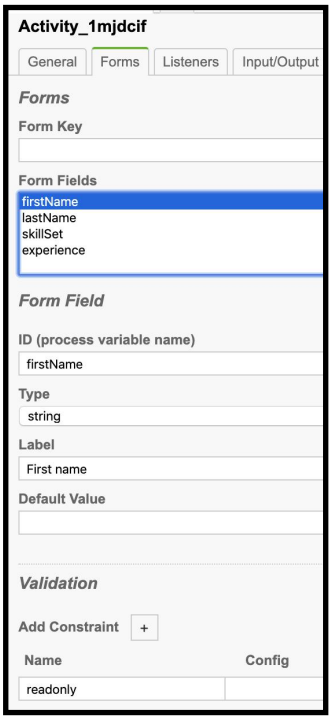
Activity_1mjdcif
General
Forms
Listeners
Input/Output
Forms
Form Key
Form Fields
firstName
lastName
skillSet
experience
Form Field
ID (process variable name)
firstName
Type
string
Label
First name
Default Value
Validation
Add Constraint
+
Name
Config
readonly

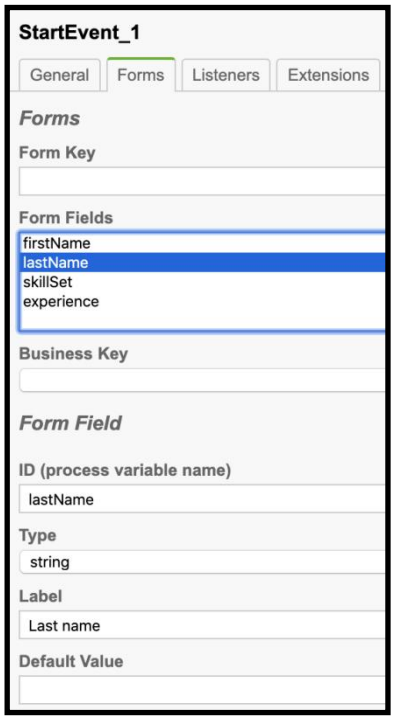
StartEvent_1
General
Forms
Listeners
Extensions
Forms
Form Key
Form Fields
firstName
lastName
skillSet
experience
Business Key
Form Field
ID (process variable name)
lastName
Type
string
Label
Last name
Default Value

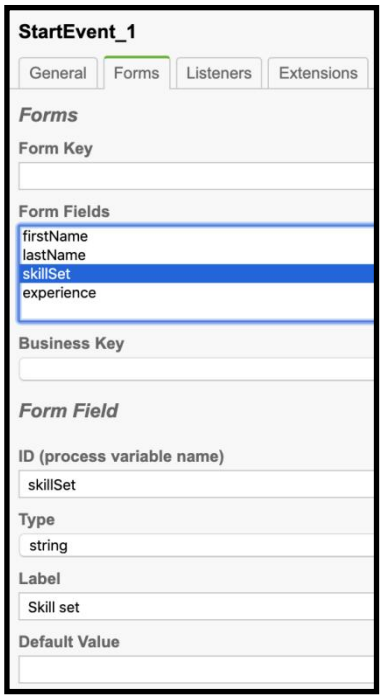

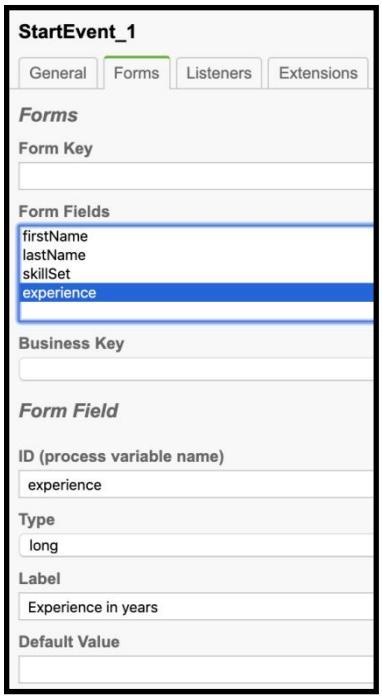

3. User task: HR Desk

Properties:

Id: Activity_1mjdcif

Name: HR Desk

Assignee: demo

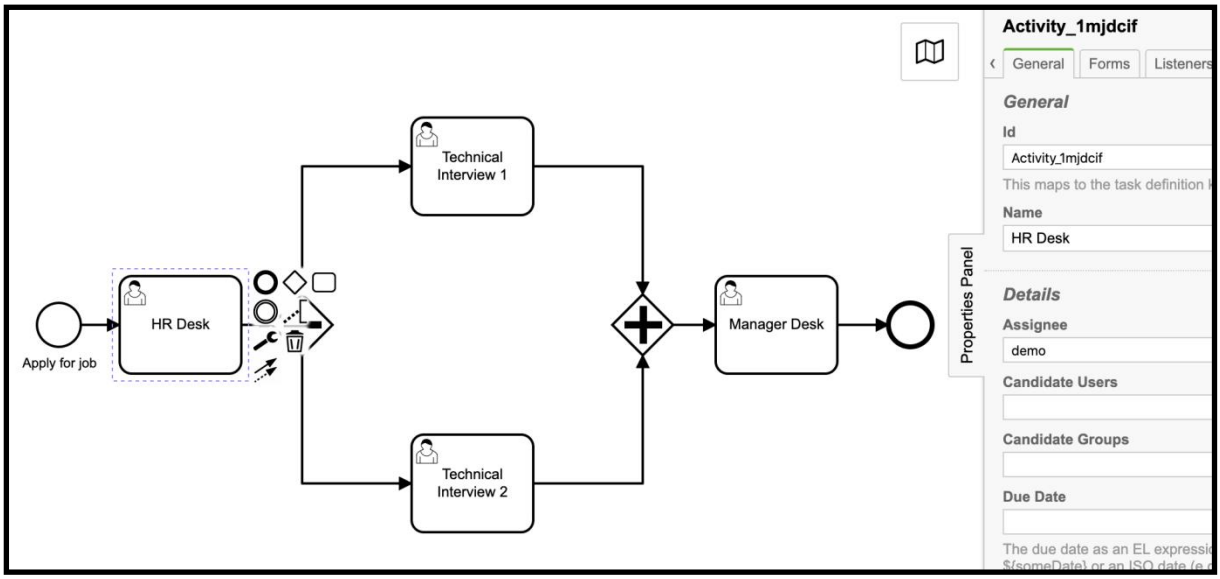

Task form:

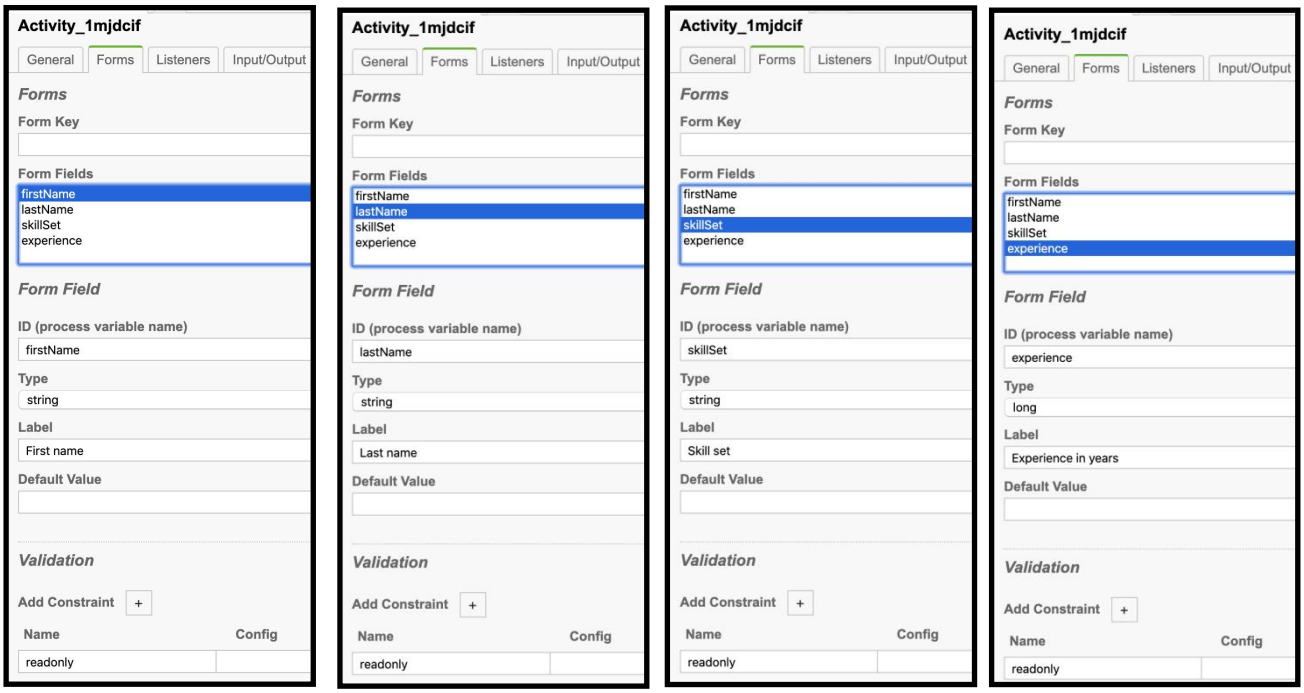

4. User task: Technical Interview 1

Id: Activity_1k1s7cr

Name: Technical Interview 1

Assignee: demo

Task form:

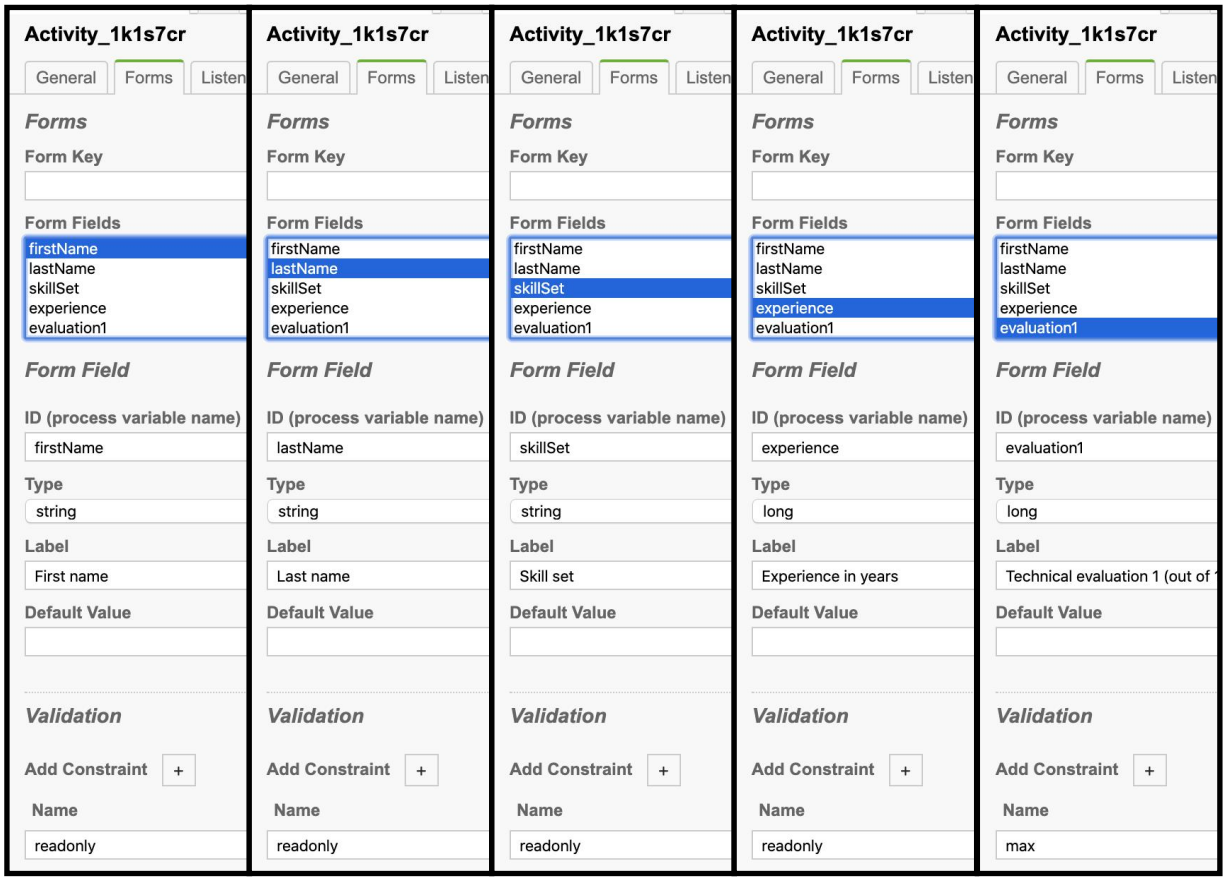

5. User task: Technical Interview 2

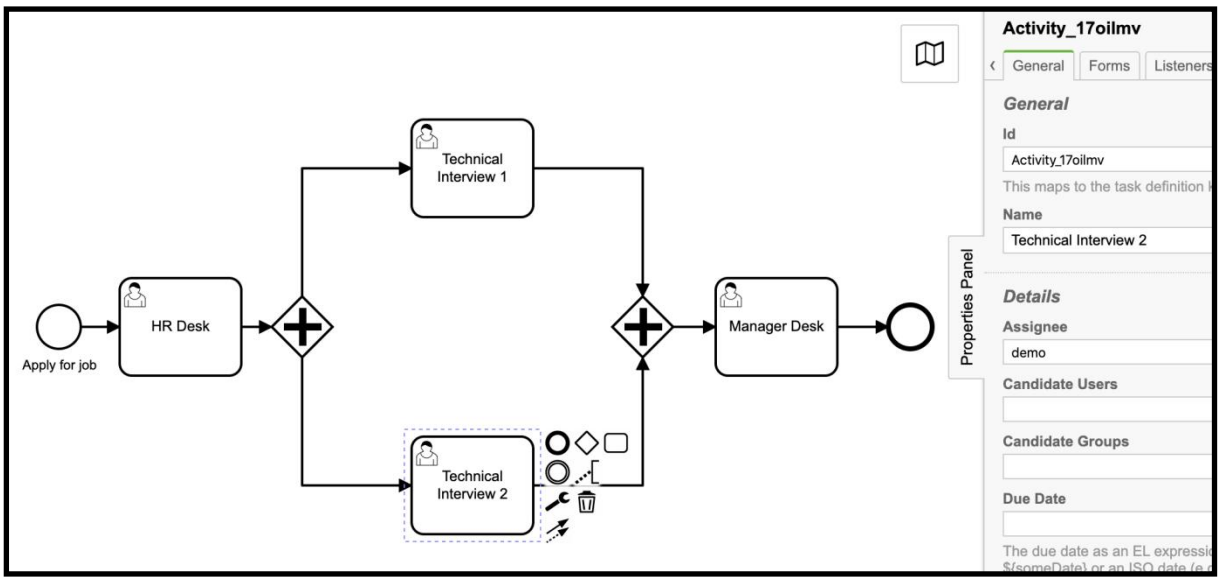

Id: Activity_11ffnq3

Name: Technical Interview 2

Assignee: demo

Task form:

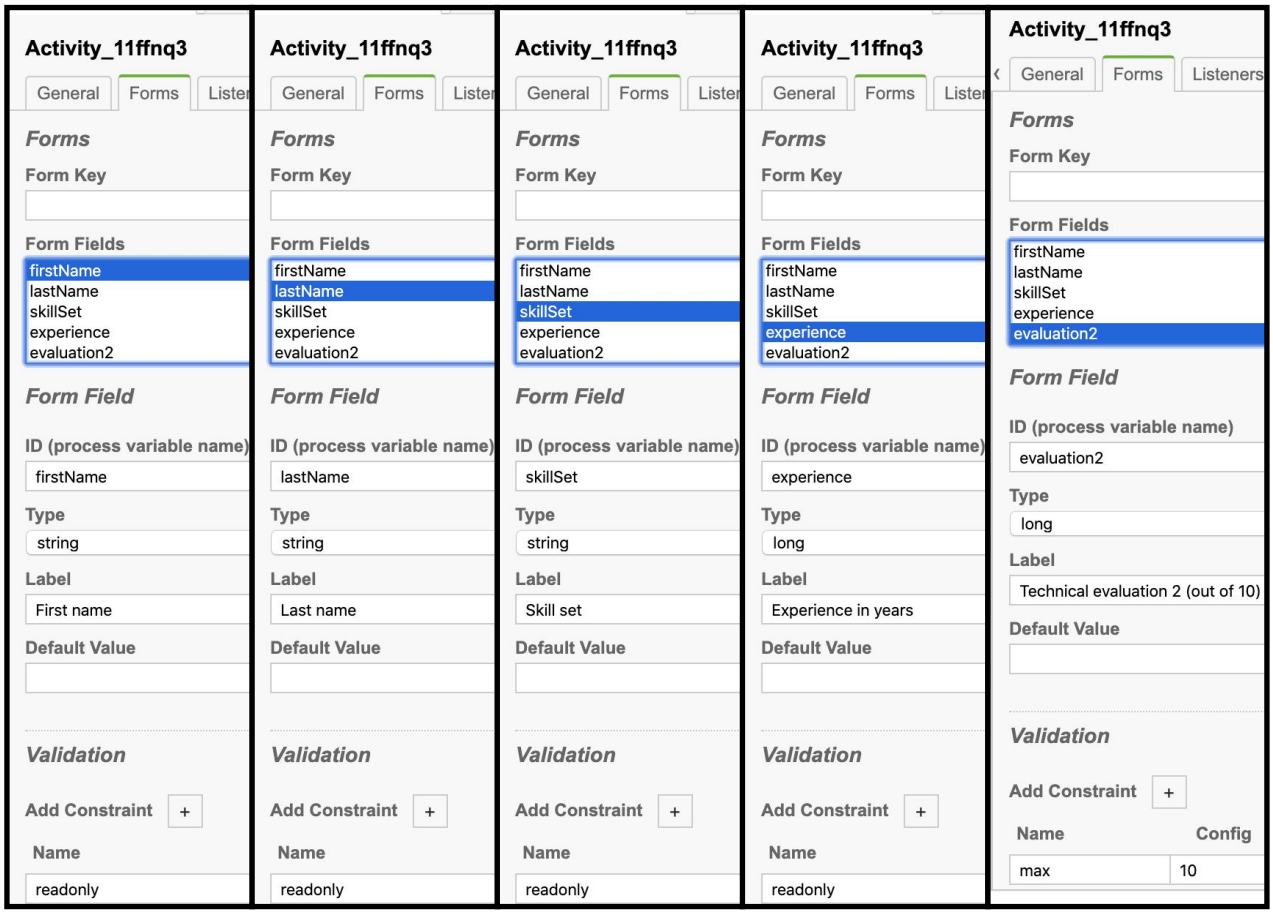

6. User task: Manager Desk

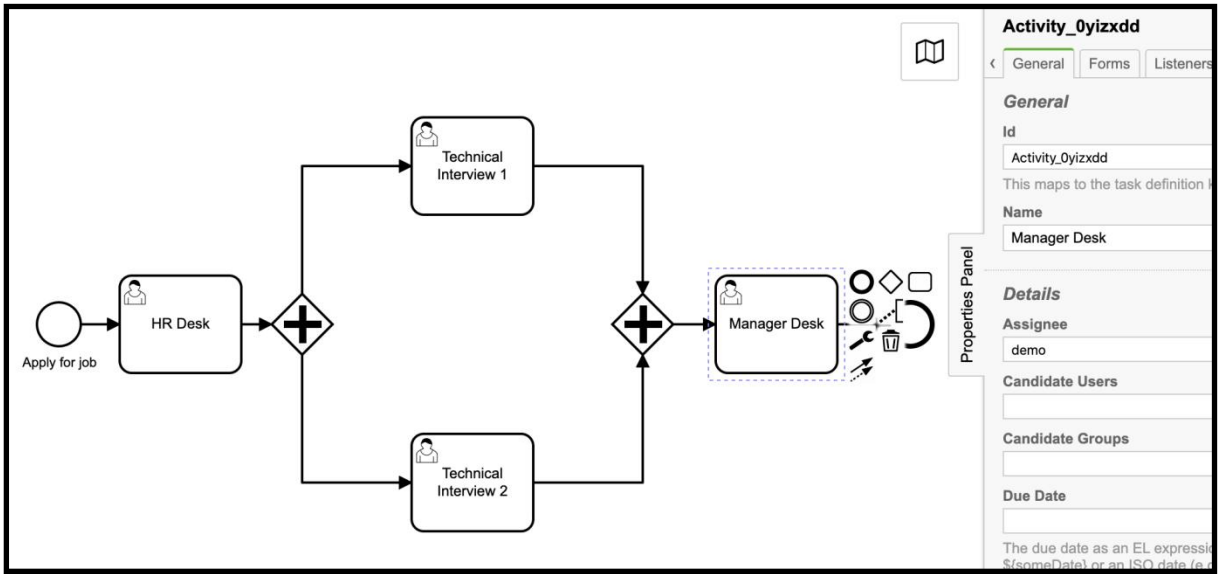

Id: Activity_0yizxdd

Name: Manager Desk

Assignee: demo

Task form:

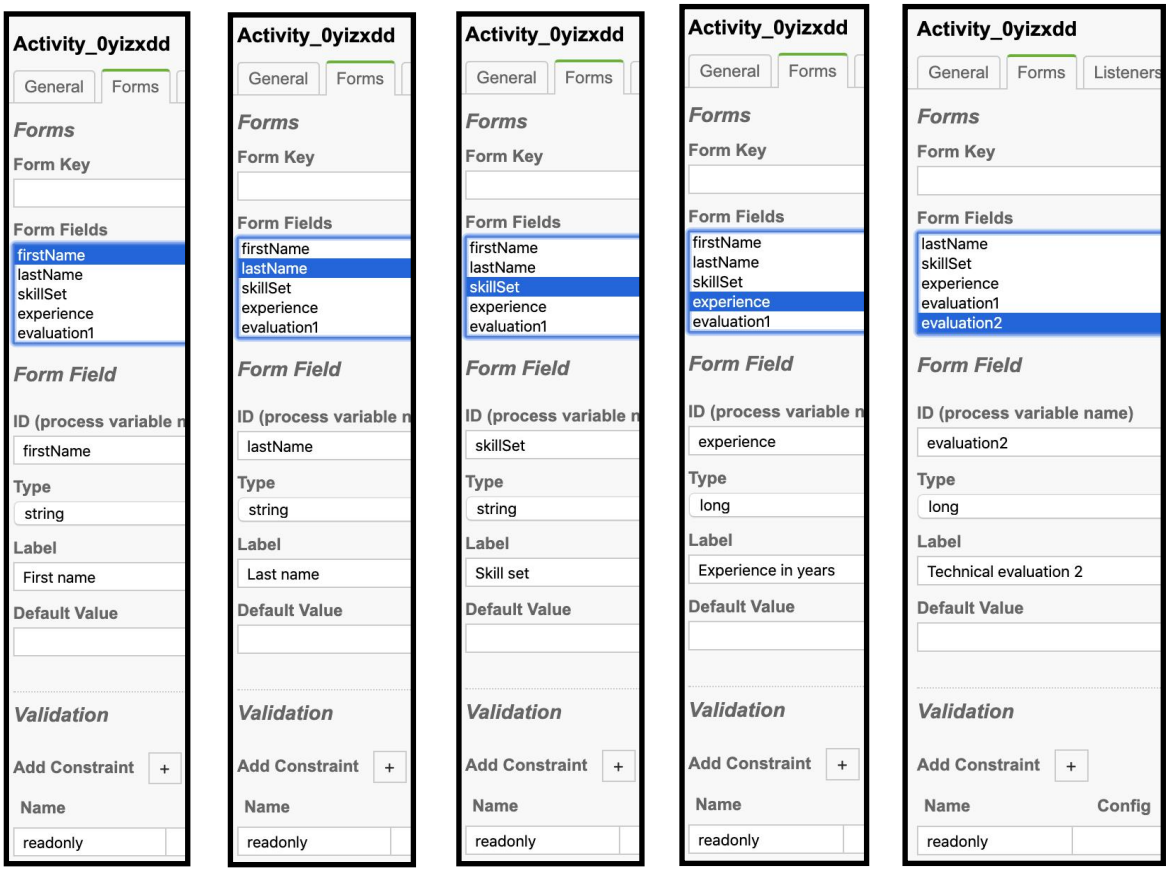

7. Deploy the process and start the process.

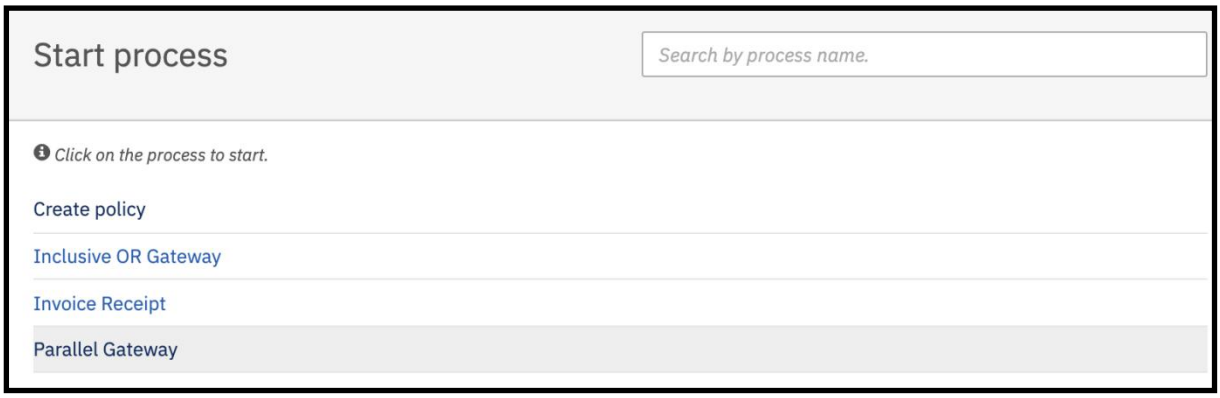

Hit the Parallel Gateway process. It will open start process form.

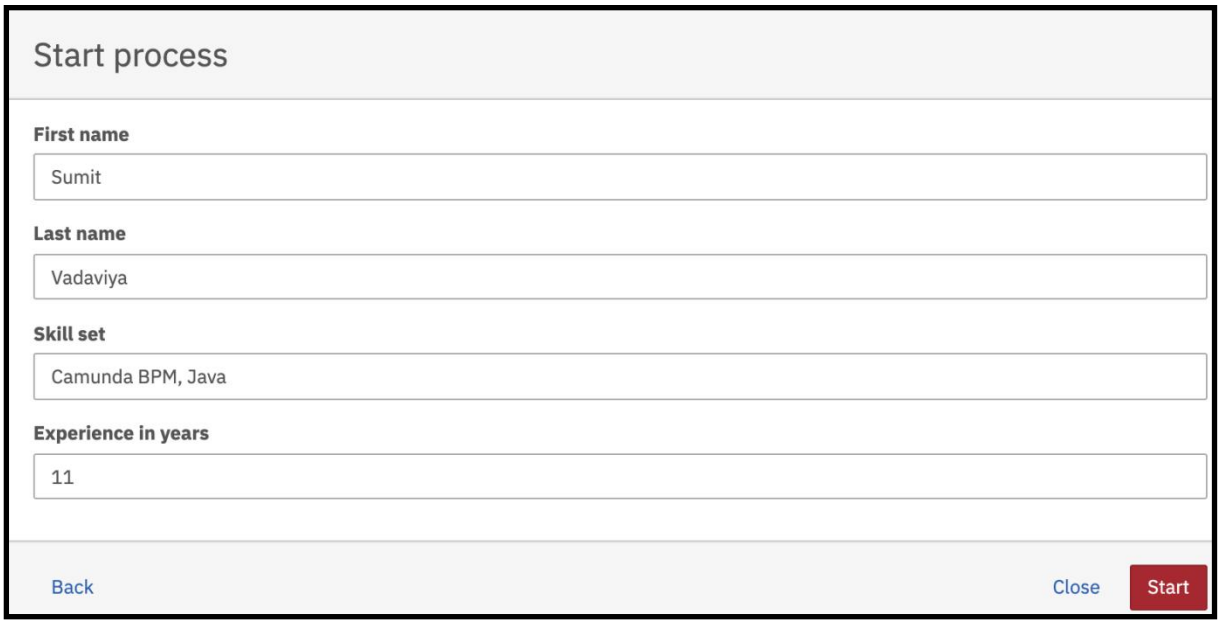

Hit the Start button.

As per process definition HR Desk user task will get created.

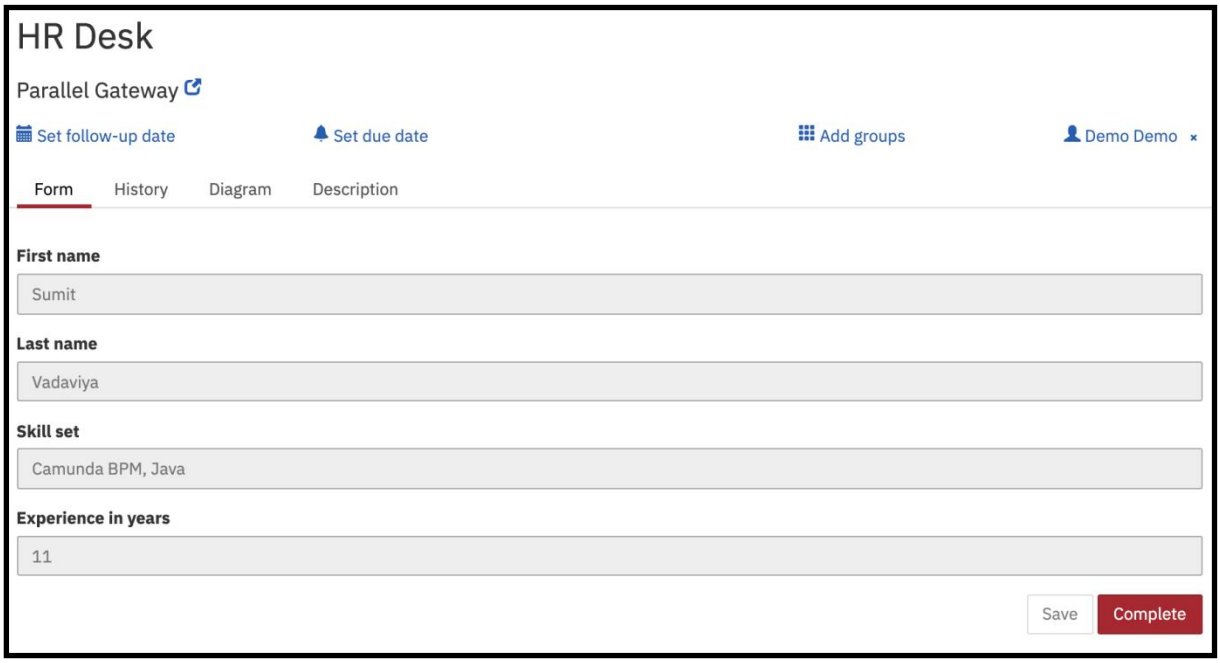

Hit the Complete button.

As we have used parallel gateways after HR Desk user task. Two user tasks Technical Interview 1 and Technical Interview 2 are created concurrently.

Complete the user task Technical Interview 1.

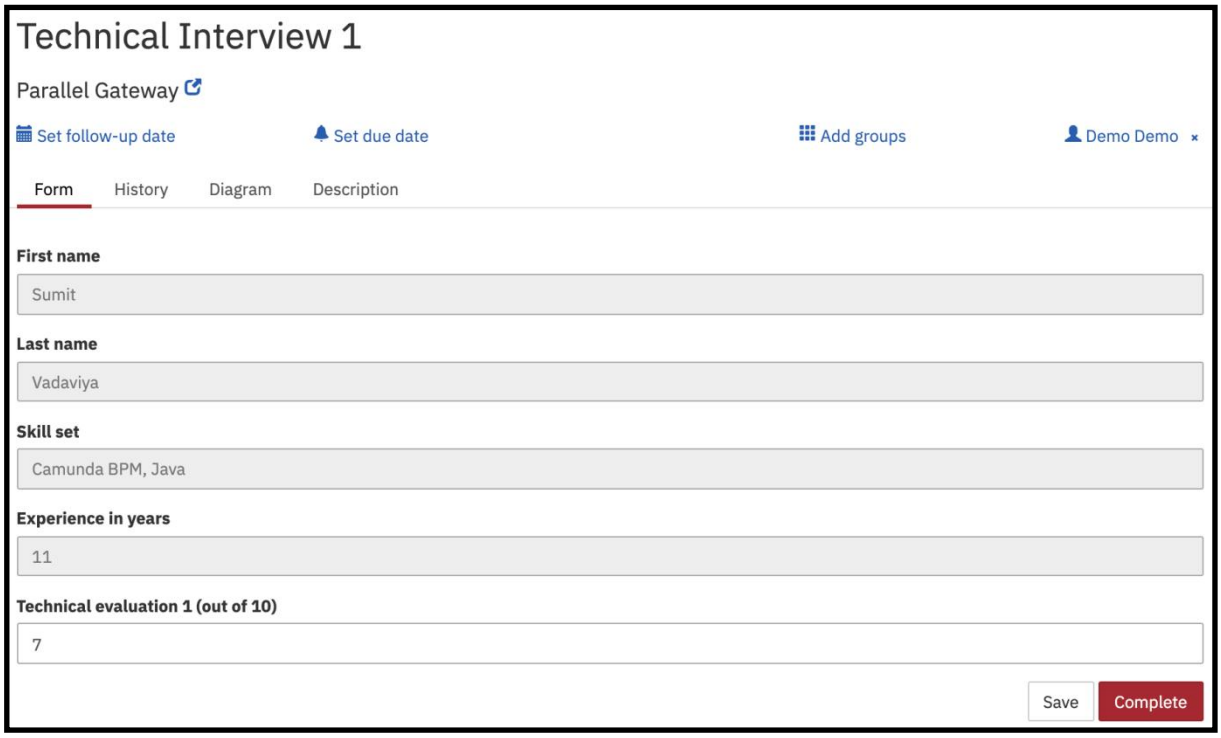

Hit the Complete button to complete the user task Technical Interview 1.

Complete the user task Technical Interview 2.

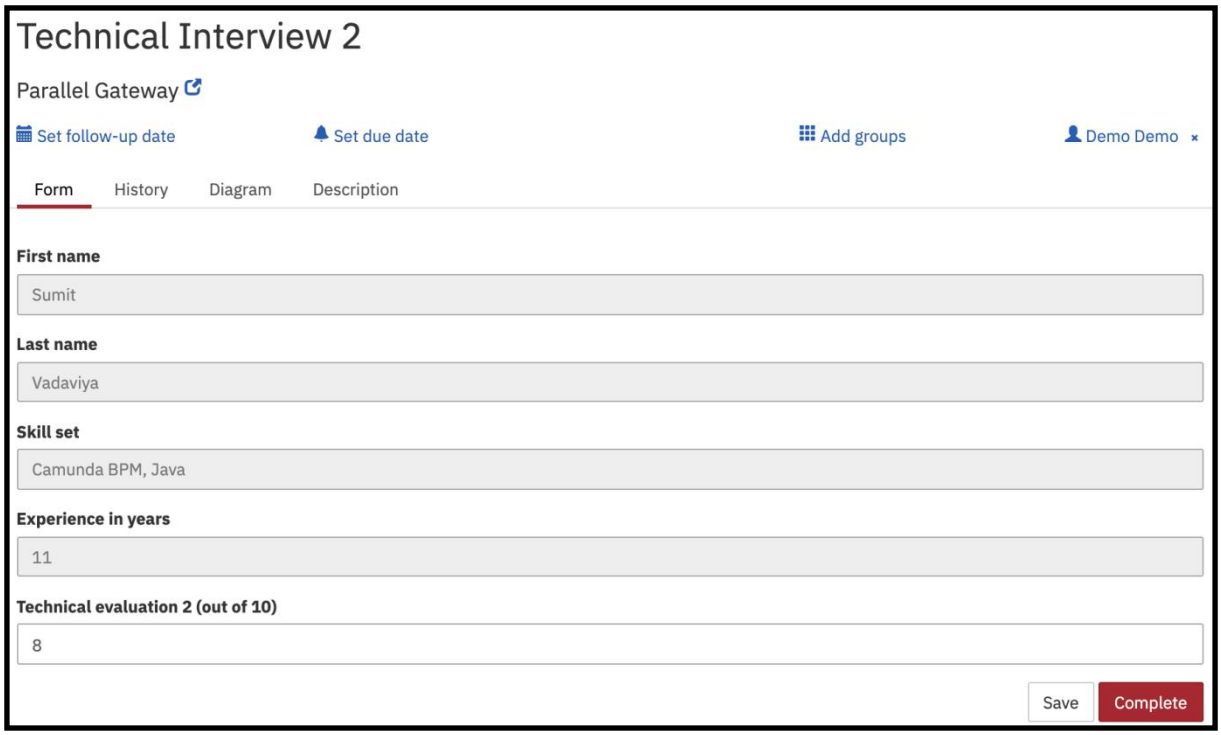

Hit the Complete button to complete the user task Technical Interview 2.

As per process definition, user task Manager Desk task will be created only after completing user task Technical Interview 1 and user task Technical Interview 2.

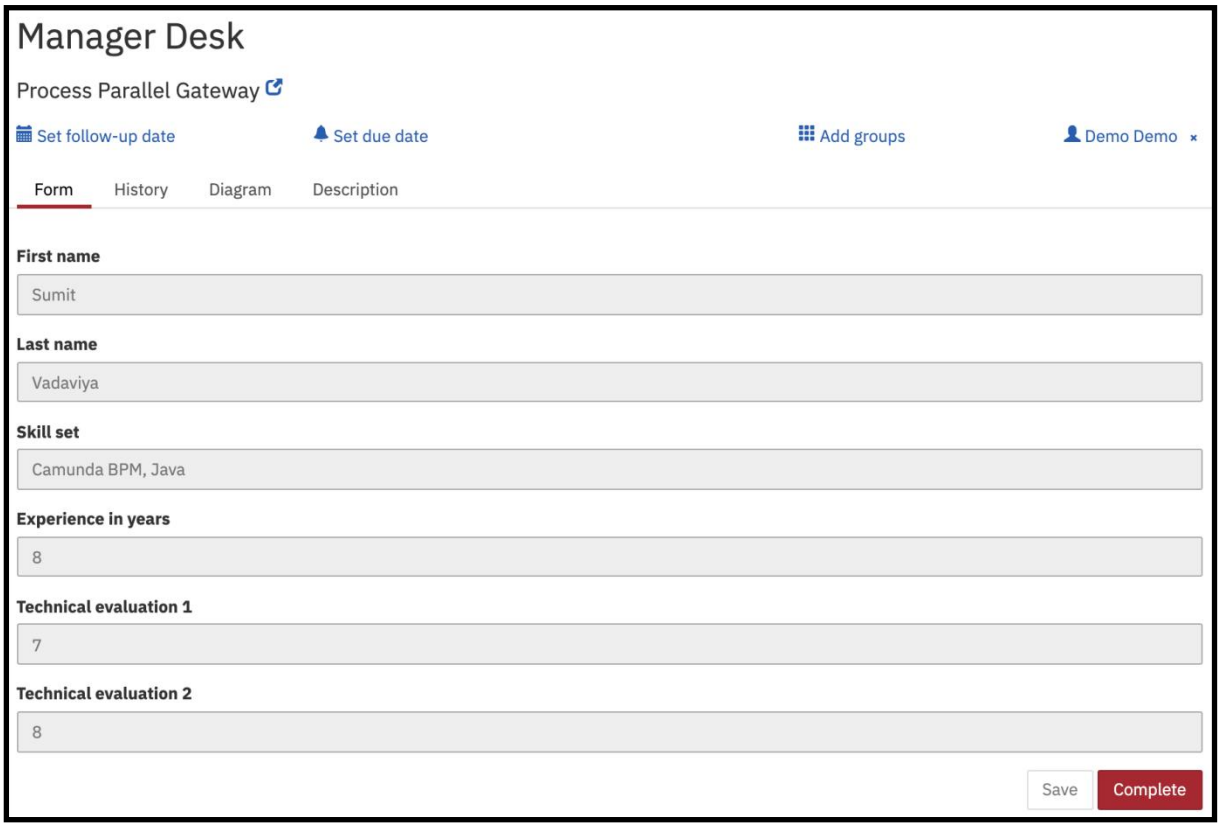

As you can see manager will see technical evaluations provided by previous tasks and finally hit the Complete button to stop the process.